GILLINGHAM

TYPICAL POINT CONTACTOR.

5.6.8 POINTS

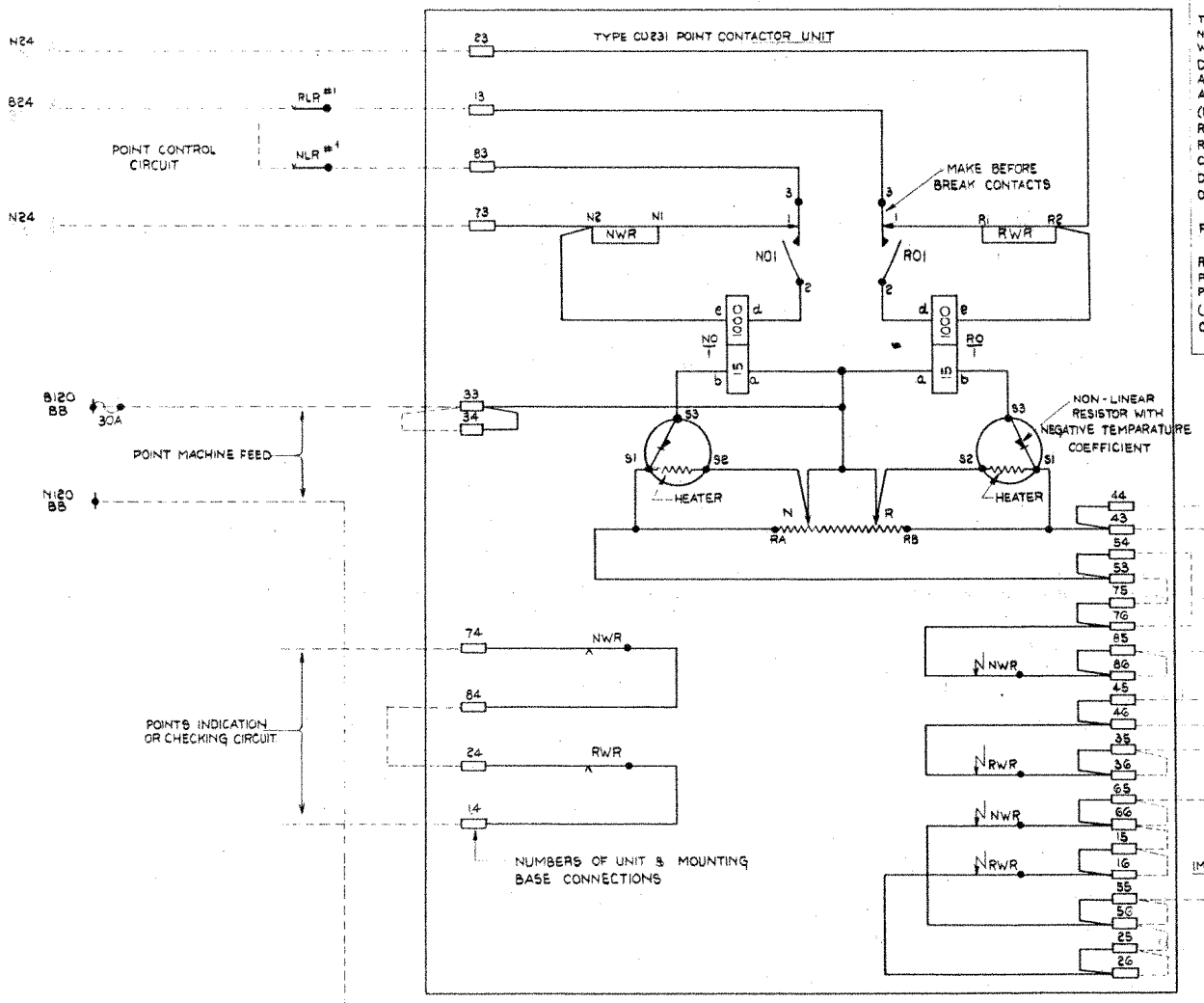

OPERATION

THE TYPE CU231 POINT CONTACTOR IS CIRCUITED TO BE NORMALLY DE-ENERGISED NORMAL & REVERSE. WHEN OPERATED TO "N" OR "R" AND WITH THE MACHINE DRAWING CURRENT FROM B120 THE VOLTAGE DEVELOPED ACROSS THE TAPPED SECTION OF THE 0·64 RESISTOR IS APPLIED TO THE a-b COIL OF THE OVERLOAD RELAY (NO OR RO) IN SERIES WITH A THERMISTOR NON-LINEAR RESISTOR. AS THE THERMISTOR HEATER PROGRESSIVELY REDUCES THE N-L RESISTOR VALUE, THE RELAY COIL CURRENT INCREASES UNTIL THE OVERLOAD RELAY OPERATES, DISCONNECTING THE CONTACTOR COIL (NWR OR RWR) THE OVERLOAD RELAY THEN HOLDING OPERATED BY ITS d-e COIL.

WITH CONTACTOR RELEASED, SUPPLY IS DISCONNECTED FROM MACHINE & THERMISTOR COOLS TO NORMAL CONDITION.

THE OVERLOAD RELAY CAN BE RELEASED ONLY BY REVERTING THE CONTROLS TO THE ORIGINAL POSITION OF POINT MACHINE. ADJUSTMENT OF 0·64 Ω RESISTOR IS PRE-SET SO THAT WITH MACHINE DRAWING 10 AMPS (IE. RUNNING ON CLUTCH) THE OVERLOAD RELAY WILL OPERATE AFTER 4-6 SECONDS.

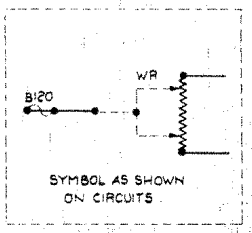

IMPORTANT :- IN ORDER TO ENSURE THAT THE ARC-EXTINGUISHING MAGNETS FITTED TO THE POWER CONTACTS ARE EFFECTIVE THE POLARITY OF SUPPLY AND MACHINE CONNECTIONS MUST BE ARRANGED AS SHOWN ON THIS TYPICAL CIRCUIT.

#1 WZR CONTACTS WHERE POINT CONTACTOR IS REMOTE FROM SIGNAL BOX.

DRAWN BY	D.G.C.	DATE AMENDED	11-1-73
TRACED BY		REASON	C/199.84
CHECKED BY		BY	
APPROVED BY			

Produced	ICE	20-11-07
Checked		23/11/07
Issued		

SOURCE DOCUMENT UPDATE		
Version	Prod.	Check
BJ1	ICE	GRH
BJ3	ICE	GRH

Current Version	BJ3

BRITISH RLYS (Southern Region)

Date

No. 1926E-43

THE SIEMENS AND GENERAL ELECTRIC RAILWAY SIGNAL CO. LTD., LONDON.

No. 731/4A/1006